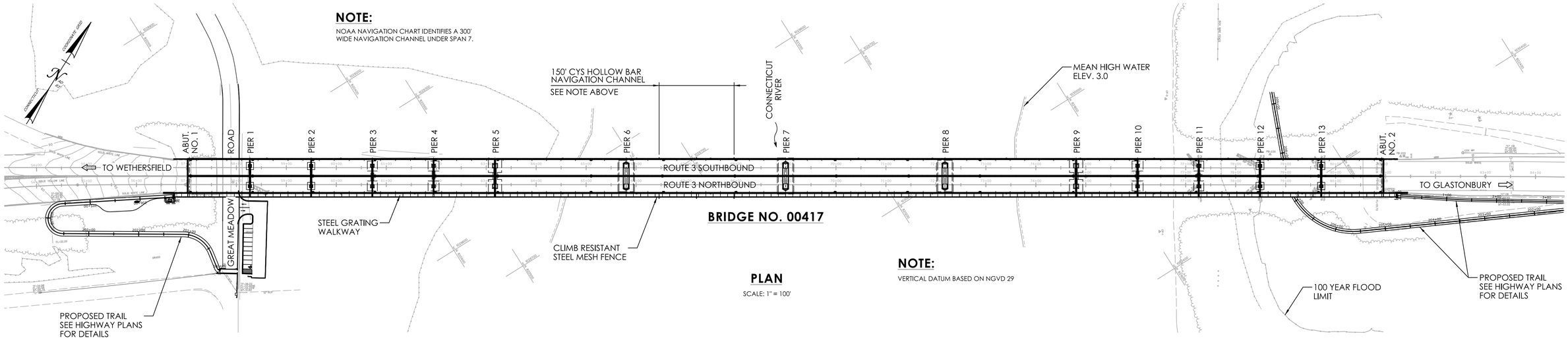

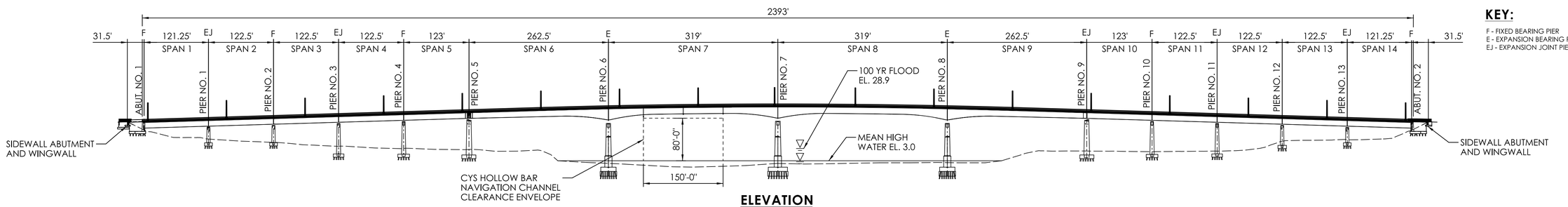

KEY:

F - FIXED BEARING PIER
E - EXPANSION BEARING PIER
EJ - EXPANSION JOINT PIER

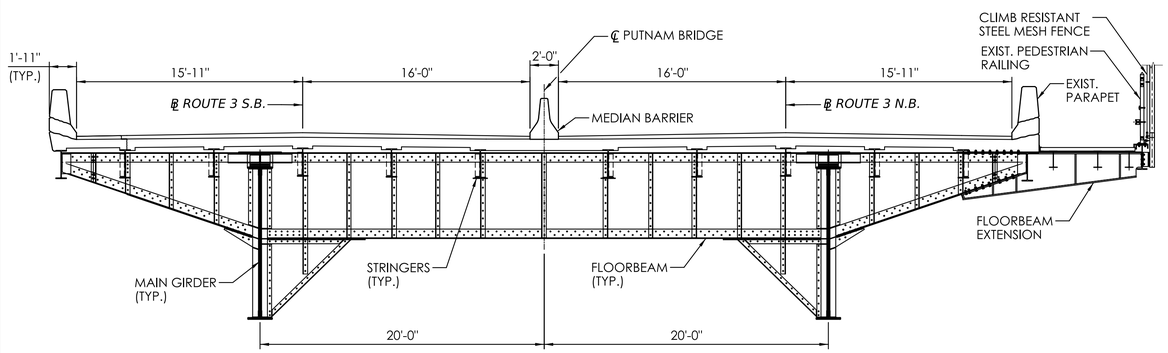

TYPICAL SECTION AT FLOOR BEAM

SCALE: 3/16" = 1'

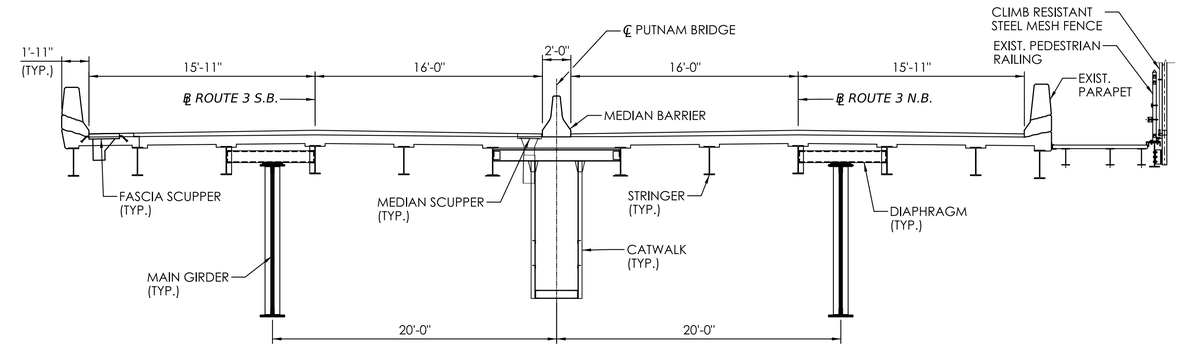

TYPICAL SECTION

SCALE: 3/16" = 1'

REV.	DATE	REVISION DESCRIPTION

DESIGNER/DRAFTER: CHECKED BY:

SIGNATURE/ BLOCK:

STATE OF CONNECTICUT
DEPARTMENT OF TRANSPORTATION

PROJECT NUMBER: 0053-0199
PROJECT DESCRIPTION: PUTNAM BRIDGE REHABILITATION
TOWN(S): WETHERSFIELD/GLASTONBURY
DRAWING TITLE: GENERAL PLAN AND ELEVATION

DRAWING NO. S-1
SHEET NO.

LASTED SAVED BY: SRazack **FILE NAME:** M:\0053-0199_Putnam Bridge Rehabilitation\300_Engineering & Design\310-Bridge\Contract Plans\SB_CP_0053_0199_00417_GNP.dgn
PLOTTED DATE: 11/5/2023