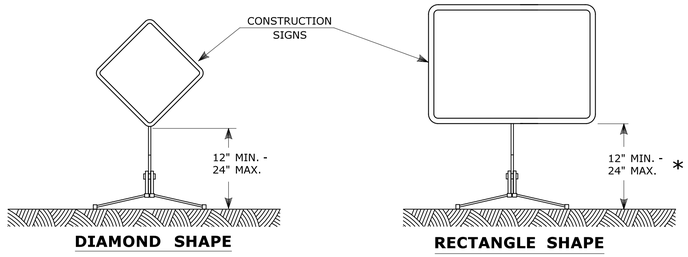

PORTABLE CONSTRUCTION SIGNS

NOTES FOR PORTABLE SIGN SUPPORTS:

1. SIGNS AND THEIR PORTABLE SUPPORTS SHALL CONFORM TO THE REQUIREMENTS OF NCHRP REPORT 350 (TL-3) OR THE AASHTO MASH FOR CATEGORY 2 DEVICES AND THE LATEST EDITION OF THE MUTCD.
2. MOUNTING HEIGHT OF SIGNS SHALL BE A MINIMUM OF 12" AND A MAXIMUM OF 24". SIGNS SHALL BE MOUNTED HIGHER AS NEEDED TO MEET FIELD CONDITIONS OR AS DIRECTED BY THE ENGINEER.
3. THE ENGINEER RESERVES THE RIGHT TO REJECT ANY SUPPORT DEEMED UNSUITABLE FOR THE PURPOSE INTENDED.
4. PORTABLE SIGN SUPPORTS SHALL BE STABILIZED IN A MANNER THAT WILL NOT AFFECT THEIR COMPLIANCE WITH NCHRP REPORT 350 (TL-3) OR THE AASHTO MASH FOR CATEGORY 2 DEVICES.
5. PORTABLE CONSTRUCTION SIGN SUPPORTS SHOULD NOT BE USED FOR DURATION OF MORE THAN 3 DAYS EXCEPT FOR R9-8 THROUGH R9-11a SERIES, R11 SERIES, W1-6 THROUGH W1-8 SERIES, M4-10, AND E5-1. SEE STANDARD SHEET TR-1220_01 - "SIGNS FOR CONSTRUCTION AND PERMIT OPERATIONS" FOR SIGN DETAILS.

* FOR E5-1 (EXIT SIGNS) USE MIN 48".

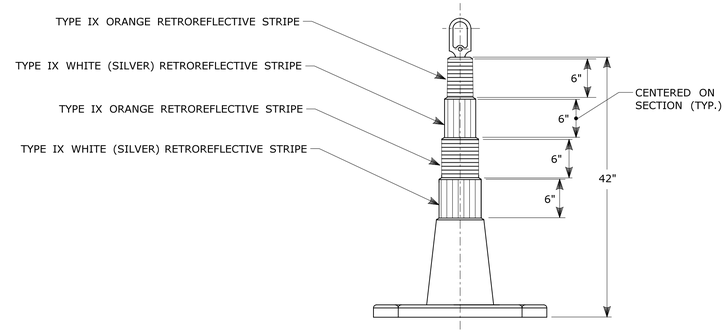

42" TRAFFIC CONE

NOTES:

1. TRAFFIC CONES SHALL CONFORM TO THE REQUIREMENTS OF NCHRP REPORT 350 (TL-3) OR THE AASHTO MASH FOR CATEGORY 1 DEVICES AND THE LATEST EDITION OF THE MUTCD.
2. IF RUBBER CONES ARE USED, THEY SHALL HAVE INTERIOR RIBS FOR RIGIDITY.
3. IF PLASTIC CONES ARE USED, THEY SHALL BE COLOR IMPREGNATED.
4. THE ENGINEER RESERVES THE RIGHT TO REJECT ANY CONE DEEMED UNSUITABLE FOR THE PURPOSE INTENDED.
5. THE ENTIRE AREA OF ORANGE AND WHITE STRIPES SHALL BE RETROREFLECTIVE SHEETING AS REQUIRED IN THE SPECIFICATIONS.
6. THE SECTIONS OF CONES NOT COVERED WITH RETROREFLECTIVE STRIPES SHALL BE ORANGE.

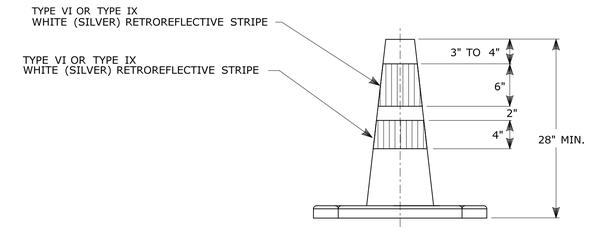

TRAFFIC CONE

NOTES:

1. TRAFFIC CONES SHALL CONFORM TO THE REQUIREMENTS OF NCHRP REPORT 350 (TL-3) OR THE AASHTO MASH FOR CATEGORY 1 DEVICES AND THE LATEST EDITION OF THE MUTCD.
2. IF RUBBER CONES ARE USED, THEY SHALL HAVE INTERIOR RIBS FOR RIGIDITY.
3. IF PLASTIC CONES ARE USED, THEY SHALL BE COLOR IMPREGNATED.
4. THE ENGINEER RESERVES THE RIGHT TO REJECT ANY CONE DEEMED UNSUITABLE FOR THE PURPOSE INTENDED.
5. TRAFFIC CONES NOT USED AT NIGHT MAY UTILIZE TYPE III SHEETING.
6. THE SECTIONS OF CONES NOT COVERED WITH RETROREFLECTIVE STRIPES SHALL BE ORANGE.

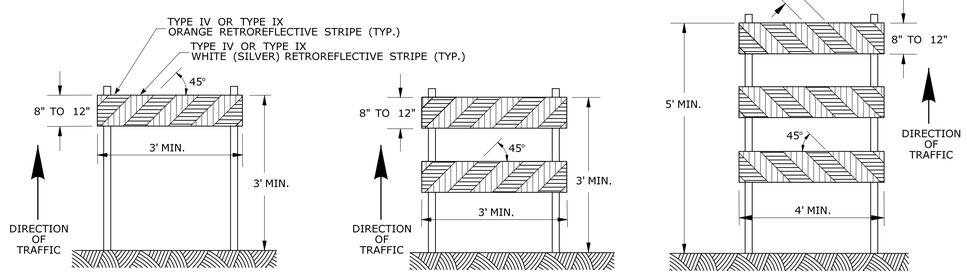

CONSTRUCTION BARRICADES

NOTES:

1. CONSTRUCTION BARRICADES SHALL CONFORM TO THE REQUIREMENTS OF NCHRP REPORT 350 (TL-3) OR THE AASHTO MASH AND THE LATEST EDITION OF THE MUTCD.
2. MARKINGS FOR BARRICADE RAILS SHALL BE ALTERNATE ORANGE AND WHITE STRIPES SLOPING DOWNWARD IN THE DIRECTION TRAFFIC IS TO PASS. 6" WIDE STRIPES SHALL BE USED.
3. THE ENTIRE AREA OF ORANGE AND WHITE STRIPES SHALL BE RETROREFLECTIVE SHEETING AS REQUIRED IN THE SPECIFICATIONS. THE SIDES OF BARRICADES FACING TRAFFIC SHALL HAVE RETROREFLECTIVE RAIL FACES.
4. THE ENGINEER RESERVES THE RIGHT TO REJECT ANY BARRICADE DEEMED UNSUITABLE FOR THE PURPOSE INTENDED.
5. CORNERS OF BARRICADE RAILS SHALL BE ROUNDED.
6. SIGNS MAY ONLY BE INSTALLED ON TYPE III BARRICADES AND SHALL BE PLACED SO AS TO COVER NO MORE THAN ONE BARRICADE RAIL.

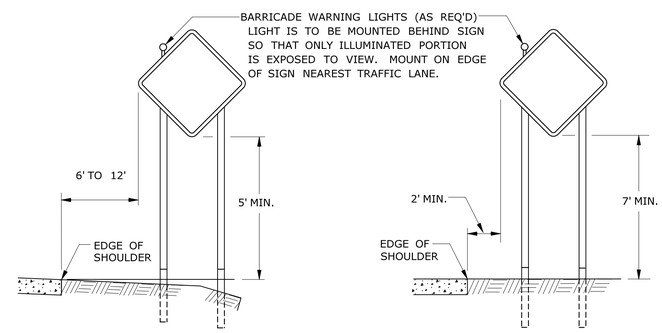

PLACEMENT OF CONSTRUCTION SIGNS
TYPICAL LONG TERM INSTALLATION

NOTES:

SUPPORTS SHALL BE METAL SIGN POSTS AND HAVE BREAK-AWAY FEATURES.

SEE TYPICAL SHEETS:
"TYPICAL SIGN SUPPORT AND SIGN PLACEMENT DETAILS-GORE EXIT SIGN"
"TYPICAL METAL SIGN POSTS AND SIGN MOUNTING DETAILS"

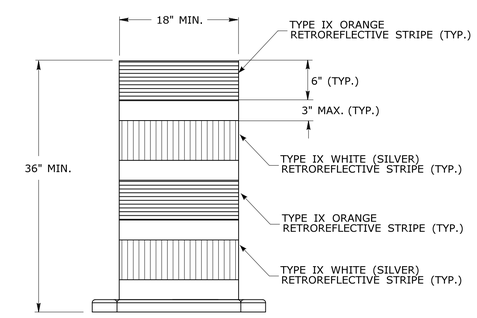

TRAFFIC DRUM
FRONT VIEW

NOTES:

1. TRAFFIC DRUM SHALL CONFORM TO THE REQUIREMENTS OF NCHRP REPORT 350 (TL-3) OR THE AASHTO MASH FOR CATEGORY 1 DEVICES AND THE LATEST EDITION OF THE MUTCD.
2. THE ENGINEER RESERVES THE RIGHT TO REJECT ANY DRUM DEEMED UNSUITABLE FOR THE PURPOSE INTENDED.
3. THE ENTIRE AREA OF ORANGE AND WHITE STRIPES SHALL BE RETROREFLECTIVE SHEETING AS REQUIRED IN THE SPECIFICATIONS.
4. THE SECTIONS OF DRUMS NOT COVERED WITH RETROREFLECTIVE STRIPES SHALL BE ORANGE.

REV.	DATE	REVISION DESCRIPTION
2	8-2015	UPDATED PER MUTCD AND FORM 816 JAN 2015 REVISION.
1	2-2011	MINOR REVISIONS.

THE INFORMATION, INCLUDING ESTIMATED QUANTITIES OF WORK, SHOWN ON THESE SHEETS IS BASED ON LIMITED INVESTIGATIONS BY THE STATE AND IS IN NO WAY WARRANTED TO INDICATE THE CONDITIONS OF ACTUAL QUANTITIES OF WORK WHICH WILL BE REQUIRED.

Plotted Date: 8/14/2015

NOT TO SCALE

STATE OF CONNECTICUT
DEPARTMENT OF TRANSPORTATION

Filename: CTDOT_TRAFFIC_STD.DGN Model: TR-1220_02

SUBMITTED BY: NAME/DATE/TIME: Mark F. Makuch, P.E. 2015.08.26 07:15:47-04'00'

APPROVED BY: NAME/DATE/TIME: Charles S. Harlow, P.E. 2015.08.28 11:40:57-04'00'

CTDOT STANDARD SHEET

OFFICE OF ENGINEERING

STANDARD SHEET TITLE: CONSTRUCTION SIGN SUPPORTS AND CHANNELIZING DEVICES

STANDARD SHEET NO.: TR-1220_02