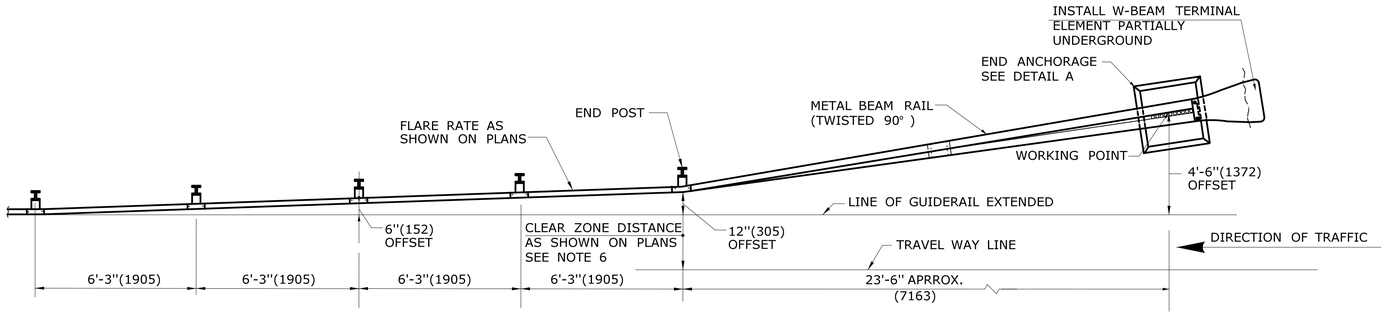

PLAN

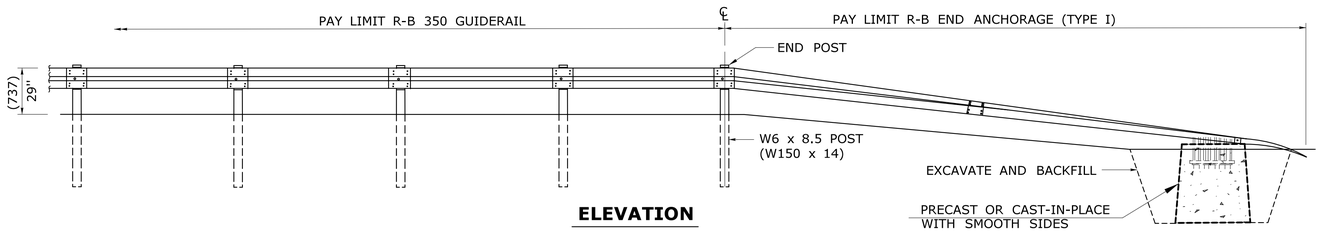

ELEVATION

R-B END ANCHORAGE TYPE I (ROADSIDE APPLICATION)

GENERAL NOTES:

1. R-B END ANCHORAGE TYPE I INSTALLED ON FREEWAYS AND RAMPS SHALL USE CLASS B (10 GAUGE) TERMINAL AND W-BEAM RAIL ELEMENTS. ALL OTHER R-B END ANCHORAGE TYPE I SHALL USE CLASS A (12 GAUGE) TERMINAL AND W-BEAM RAIL ELEMENTS.
2. R-B END ANGHORAGE TYPE II SHALL USE CLASS A (12 GAUGE) TERMINAL AND W-BEAM RAIL ELEMENTS.
3. OTHER RADII WHICH CAN BE DEMONSTRATED TO PROVIDE THE INSTALLATIONS SHOWN FOR END ANCHORAGE TYPE II MAY BE APPROVED.
4. J-HOOK BOLTS MAY BE SUBSTITUTED FOR BOTTOM PLATE ANCHORAGE IN CONCRETE END ANCHORS USING THE SAME SIZE, STRENGTH, AND LENGTH AS NOTED ON THE PLANS.
5. MINIMUM RAIL HEIGHT FOR NEW CONSTRUCTION SHALL BE 29" (737) + 1' (25).
6. R-B TYPE I END ANCHOR: INSTALL LEADING END USING DESIGN CLEAR ZONE DISTANCE MEASURED FROM TRAVEL WAY LINE TO END POST AS SHOWN ON PLANS, THEN PLACE CONCRETE ANCHOR 4'-6"(1372) FROM THE LINE OF GUIDERAIL EXTENSION. INSTALL TRAILING END ON DUAL DIRECTION ROADWAYS IN THE SAME MANNER EXCEPT MEASURE CLEAR ZONE FROM THE DOUBLE YELLOW LINE. INSTALL TRAILING END ON SINGLE DIRECTION ROADWAYS MEASURED FROM THE GUIDERAIL LINE EXTENDED AND OFFFSET 4'-6" (1372).

   R-B TYPE II END ANCHOR: INSTALL ONLY ON ROADWAYS WITH DESIGN SPEEDS < 45mph (72kph). FOR DUAL DIRECTION ROADWAYS, INSTALL IN THE SAME MANNER AS TYPE I END ANCHOR FOR BOTH LEADING AND TRAILING END USING DESIGN CLEAR ZONE DISTANCE EXCEPT PLACE CONCRETE ANCHOR 2'-4" (711) MEASURED FROM THE LINE OF GUIDERAIL EXTENDED. INSTALL TRAILING END ON SINGLE DIRECTION ROADWAYS MEASURED FROM THE GUIDERAIL LINE EXTENDED AND OFFSET 2'-4" (711).
7. SEE HW-911_04 FOR TYPICAL END ANCHOR GRADING PLAN.

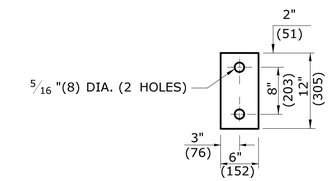

DETAIL B

TYPE 2 OBJECT MARKER

SIGN # 51-5030

OBJECT MARKER FACE SHALL BE YELLOW TYPE III RETROREFLECTORIZED. THE BOTTOM OF TYPE 2 OBJECT MARKER SHALL BE 4'(1219) ABOVE GROUND LEVEL MOUNTED ON METAL DELINEATOR POST. IT SHALL BE USED TO IDENTIFY CULVERT ENDS AND TYPE II END ANCHORS, OR AS DIRECTED BY THE ENGINEER.

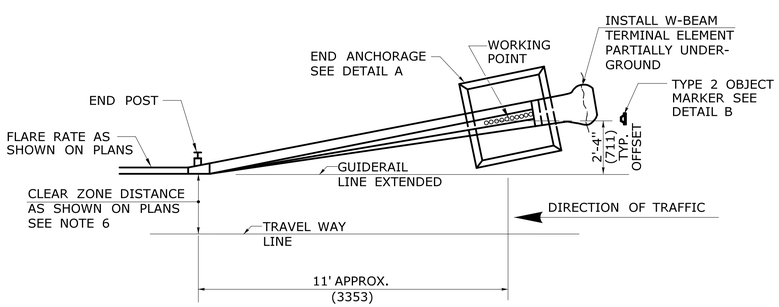

PLAN

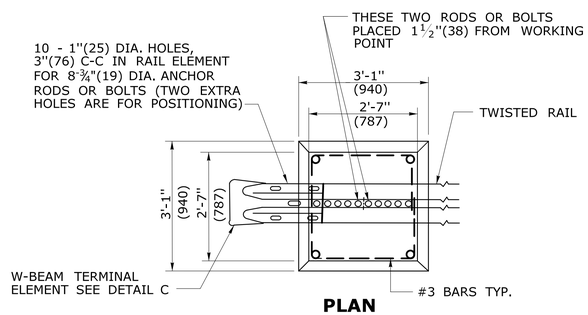

PLAN

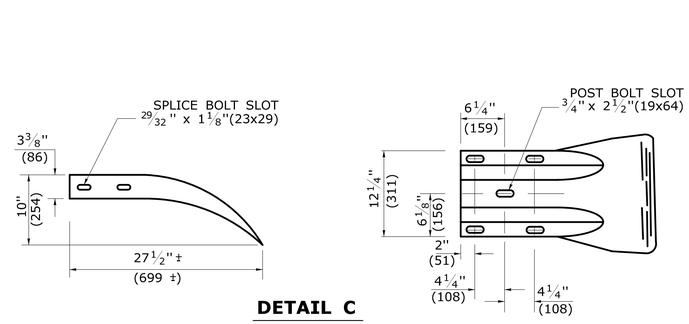

DETAIL C

W-BEAM TERMINAL ELEMENT

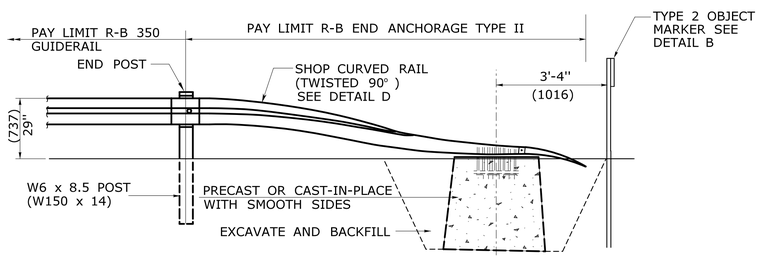

ELEVATION

R-B END ANCHORAGE TYPE II

SEE NOTE 2

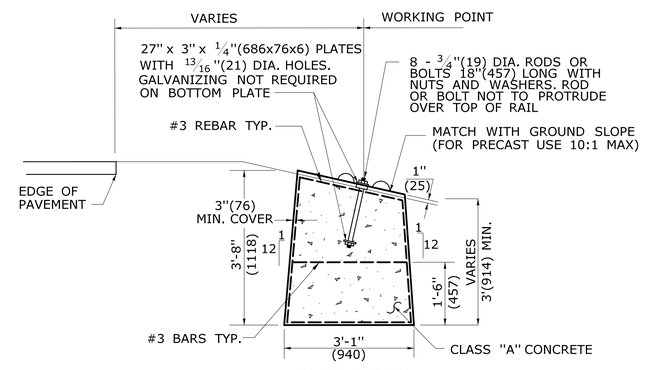

ELEVATION

DETAIL A

ROADSIDE CONCRETE END ANCHOR

SEE NOTE 4

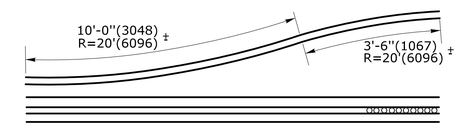

DETAIL D

SHOP CURVED RAIL

SEE NOTE 3

ALL METRIC DIMENSIONS ARE IN MILLIMETERS (mm) UNLESS OTHERWISE NOTED.

REV.	DATE	REVISION DESCRIPTION
1	6/11	REVISED TYPE I AND II ANCHOR FOR CLEAR ZONE PLACEMENT
2	7/13	ADD POST OFFSET DISTANCE -
-	-	- -
-	-	- -
-	-	- -
-	-	- -

THE INFORMATION, INCLUDING ESTIMATED QUANTITIES OF WORK, SHOWN ON THESE SHEETS IS BASED ON LIMITED INVESTIGATIONS BY THE STATE AND IS IN NO WAY WARRANTED TO INDICATE THE CONDITIONS OF ACTUAL QUANTITIES OF WORK WHICH WILL BE REQUIRED.

Plotted Date: 6/13/2013

NOT TO SCALE

STATE OF CONNECTICUT
DEPARTMENT OF TRANSPORTATION

Filename: CTDOT_HIGHWAY_STD2013.dgn Model: 70 - HW-911_01

SUBMITTED BY: NAME/DATE/TIME: Digitally signed by Leo L. Fontaine Date: 2013.07.24 10:56:59-04'00'

APPROVED BY: NAME/DATE/TIME: James H. Norman 2013.07.24 14:55:36-04'00'

CTDOT STANDARD SHEET

OFFICE OF ENGINEERING

STANDARD SHEET TITLE: R-B END ANCHORAGE TYPE I AND II

STANDARD SHEET NO.: HW-911_01