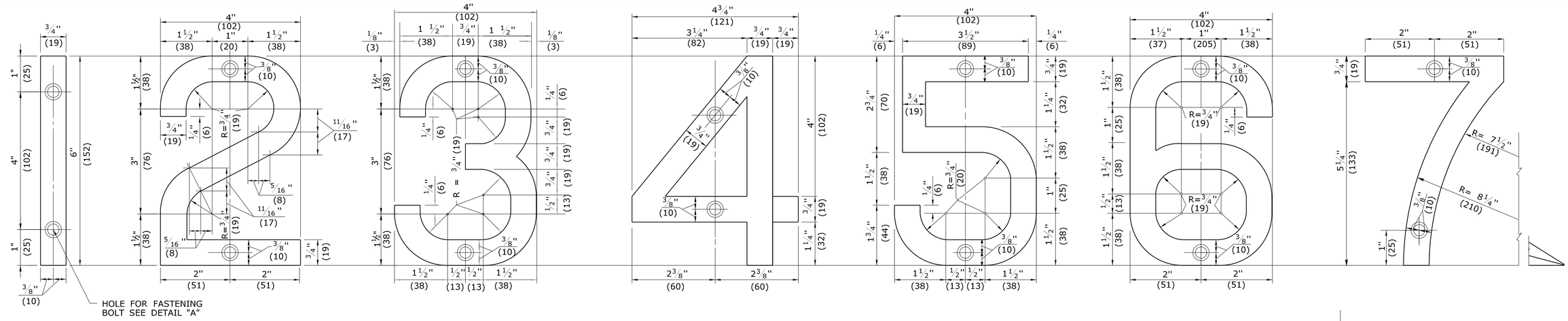

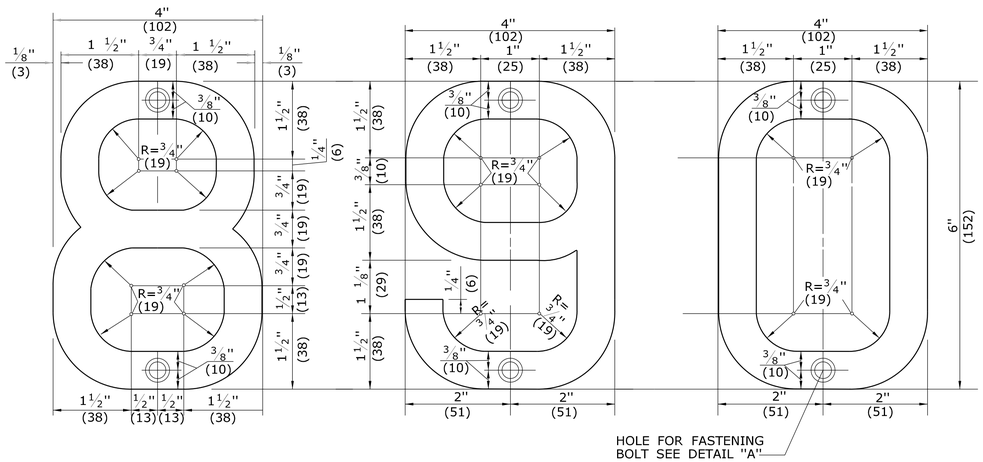

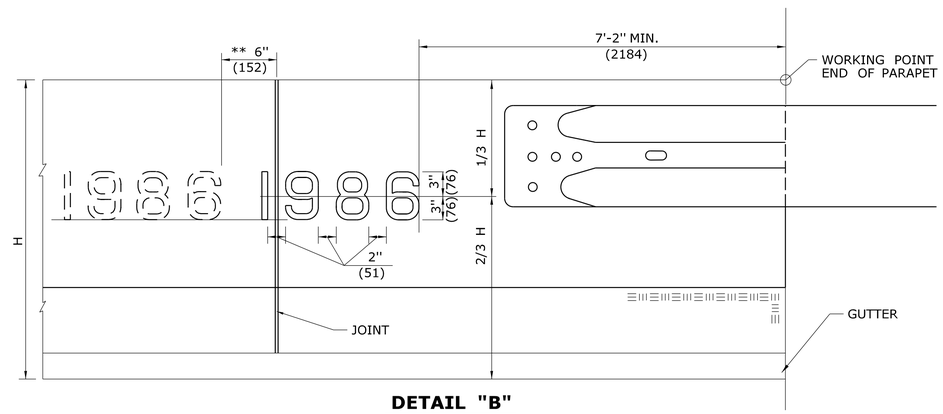

DETAIL "B"

DATE LOCATION ON PARAPET

NOTE:
**WHERE A JOINT INTERFERES, PLACE FIGURES FOR DATE 6"(152) TO THE LEFT OF JOINT AS INDICATED. WHERE THE END OF GUIDERAIL ELEMENT INTERFERS, PLACE FIGURES FOR DATE 6"(152) TO THE LEFT OF THE END OF RAIL ELEMENT.
H = PARAPET HEIGHT AT END - WORKING POINT

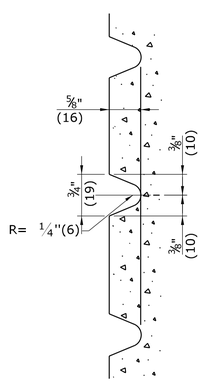

TYPICAL SECTION THROUGH FIGURES

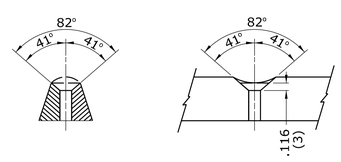

DRILL HOLE WITH #9 DRILL & COUNTERSINK FOR STD. 3/16"(5) - 24th FLATHEAD STOVE BOLT OR #10 - 24th FLATHEAD MACHINE SCREW.

DETAIL "A"

HOLE FOR FASTENING BOLT

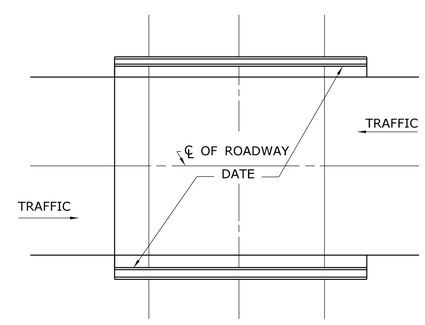

TWO WAY TRAFFIC

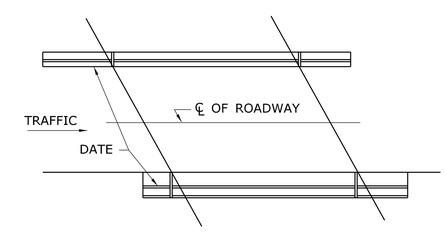

ONE WAY TRAFFIC

TYPICAL PLAN OF BRIDGE SHOWING LOCATION OF DATE AT COMPLETION

ALL METRIC DIMENSIONS ARE IN MILLIMETERS (mm) UNLESS OTHERWISE NOTED

REV.	DATE	REVISION DESCRIPTION
1	6/11	REVISE MIN. LENGTH OF GUIDERAIL ATTACHMENT
-	-	-
-	-	-
-	-	-
-	-	-
-	-	-

THE INFORMATION, INCLUDING ESTIMATED QUANTITIES OF WORK, SHOWN ON THESE SHEETS IS BASED ON LIMITED INVESTIGATIONS BY THE STATE AND IS IN NO WAY WARRANTED TO INDICATE THE CONDITIONS OF ACTUAL QUANTITIES OF WORK WHICH WILL BE REQUIRED.

Plotted Date: 5/10/2011

NOT TO SCALE

STATE OF CONNECTICUT
DEPARTMENT OF TRANSPORTATION

Filename: CTDOT_HIGHWAY_STD_JUNE2011.dgn Model: 16 - HW-601_01

SUBMITTED BY: NAME/DATE/TIME: Digitally signed by Leo Fontaine DN: c=US, st=Connecticut, l=Newington, ou=Department of Transportation, email=Leo.Fontaine@ct.gov, o=State of Connecticut, cn=Leo Fontaine Date: 2011.05.18 11:48:36 -04'00'

APPROVED BY: NAME/DATE/TIME: James H. Norman 2011.06.09 15:09:18 -04'00'

CTDOT STANDARD SHEET

OFFICE OF ENGINEERING

STANDARD SHEET TITLE:

FIGURES FOR DATES ON BRIDGE PARAPETS

STANDARD SHEET NO.: HW-601_01