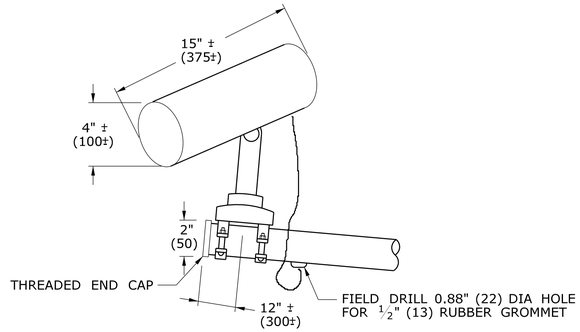

VIDEO IMAGE DETECTION SYSTEM

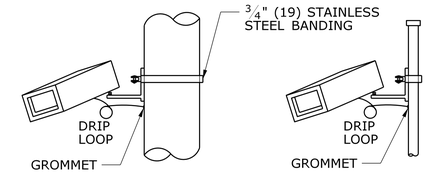

SONIC (MICROWAVE) DETECTOR

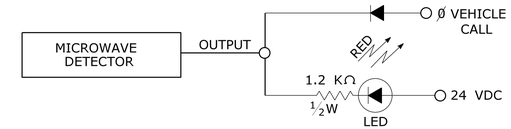

MICROWAVE DETECTOR LED LOCATED IN CONTROLLER CABINET NEAR DETECTOR HOOKUP WIRES

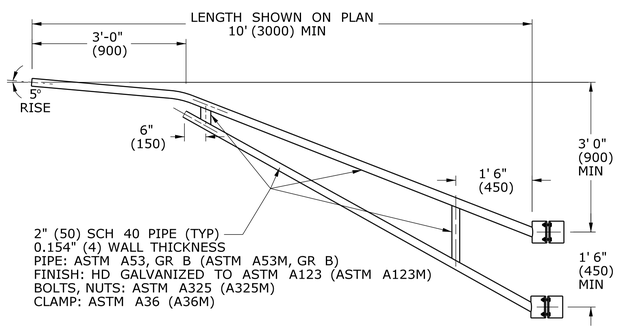

POLE MOUNT CAMERA EXTENSION BRACKET, TRUSS

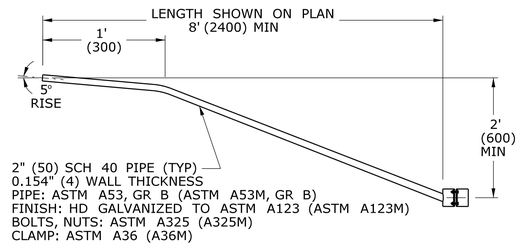

POLE MOUNT CAMERA EXTENSION BRACKET, SINGLE ARM

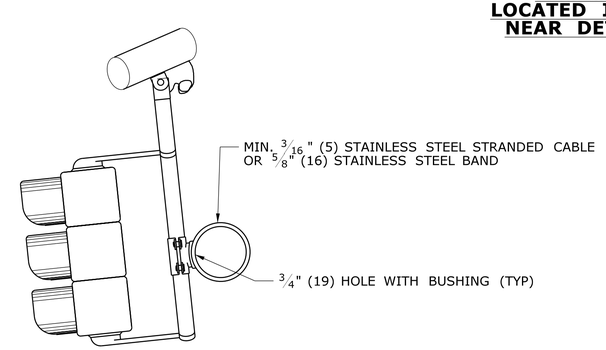

MAST ARM MOUNT CAMERA EXTENSION BRACKET

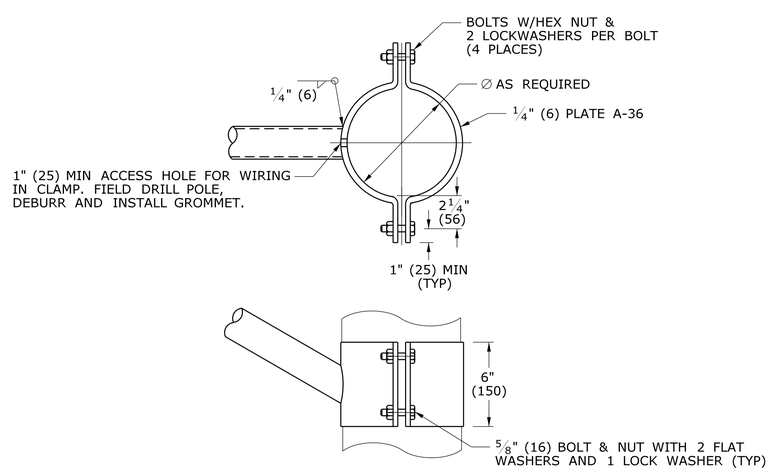

ARM CLAMP DETAIL

LEGEND AS SHOWN ON TRAFFIC CONTROL SIGNAL PLAN:

- MICROWAVE DETECTOR
- VIDS CAMERA ON EXTENSION BRACKET

REV.	DATE	REVISION DESCRIPTION
-		

THE INFORMATION, INCLUDING ESTIMATED QUANTITIES OF WORK, SHOWN ON THESE SHEETS IS BASED ON LIMITED INVESTIGATIONS BY THE STATE AND IS IN NO WAY WARRANTED TO INDICATE THE CONDITIONS OF ACTUAL QUANTITIES OF WORK WHICH WILL BE REQUIRED.

Plotted Date: 9/11/2009

NOT TO SCALE

STATE OF CONNECTICUT
DEPARTMENT OF TRANSPORTATION

Filename: CTDOT_TRAFFIC_STD.dgn Model: TR-1111_02

SUBMITTED BY: NAME/DATE/TIME: Tracy L. Fogarty 2009.09.15 08:12:11 -04'00'

APPROVED BY: NAME/DATE/TIME: John F. Carey 2009.09.16 08:25:37 -04'00'

CTDOT
STANDARD SHEET

OFFICE OF ENGINEERING

STANDARD SHEET TITLE:

VEHICLE DETECTION SYSTEMS

STANDARD SHEET NO.: TR-1111_02