COVER NOTES:

1. GROUNDING TAB WELDED TO BOTTOM CENTER OF COVER WITH 3/16" (5) WELD (3 SIDES).
2. ATTACH 6' (2 m) LENGTH OF NO. 8 GROUND WIRE TO GROUNDING TAB WITH CONDUCTOR CONNECTOR, 1/4" - 20 X 3/4" (M6 X 20) LG SST HEX HEAD BOLT, AND SST FLAT WASHER. ATTACH FREE END OF GROUND WIRE TO CONDUIT BONDING BUSHING IN HANDHOLE.
3. CONDUCTOR CONNECTOR: COPPER ALLOY BODY, BRASS SCREW, BRASS OR COPPER ALLOY PRESSURE PLATE.
4. COVER SCREW INSERT: 3/8"-16 (9-16), 1 1/2"L (37L), STAINLESS STEEL.
5. COVER SCREW: 3/8"-16 (9-16), 1"L (25L), FLAT HEAD, SLOTTED, STAINLESS STEEL.

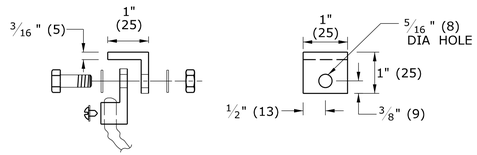

STEEL GROUNDING TAB w/ CONDUCTOR CONNECTOR

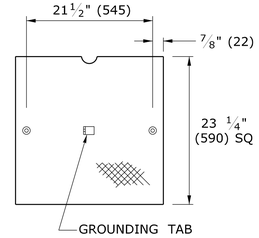

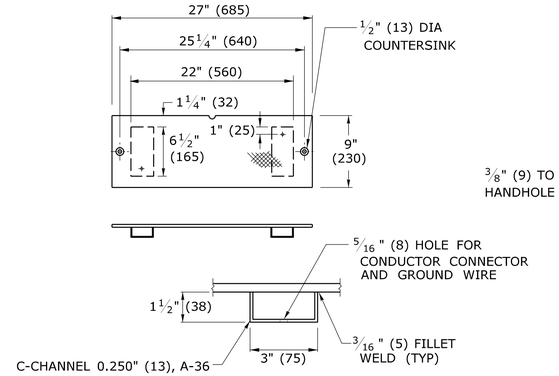

NON SKID FLOOR PLATE GALVANIZED STEEL, 3/8" (10)

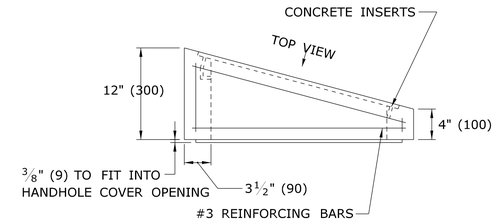

BANK ADAPTER

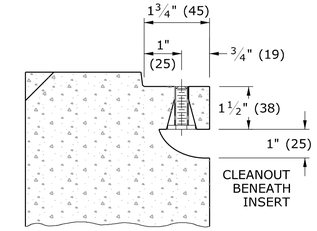

SECTION D-D

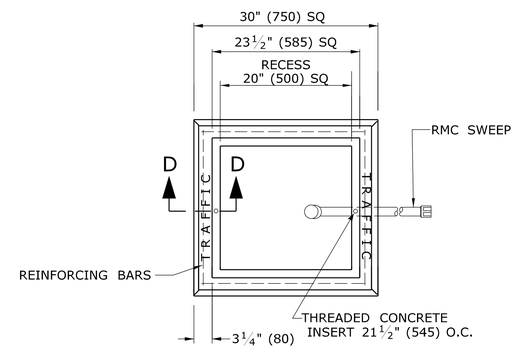

PLAN VIEW

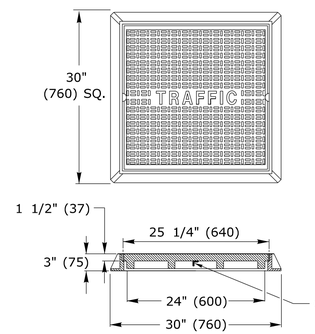

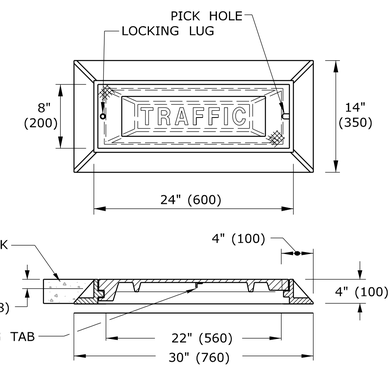

CAST IRON HANDHOLE COVERS

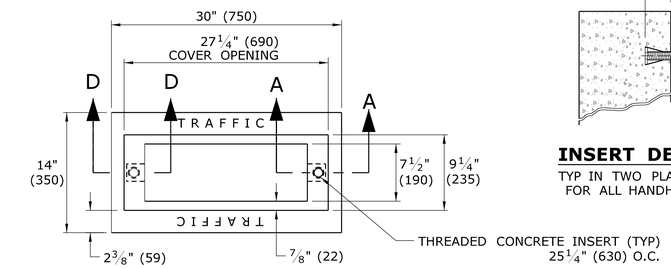

PLAN VIEW

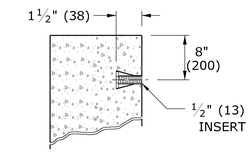

INSERT DETAIL

TYP IN TWO PLACES FOR ALL HANDHOLES

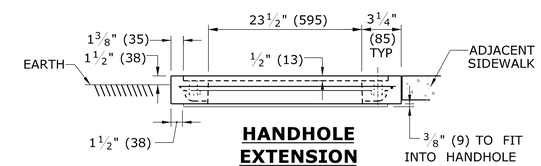

HANDHOLE EXTENSION

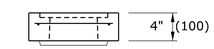

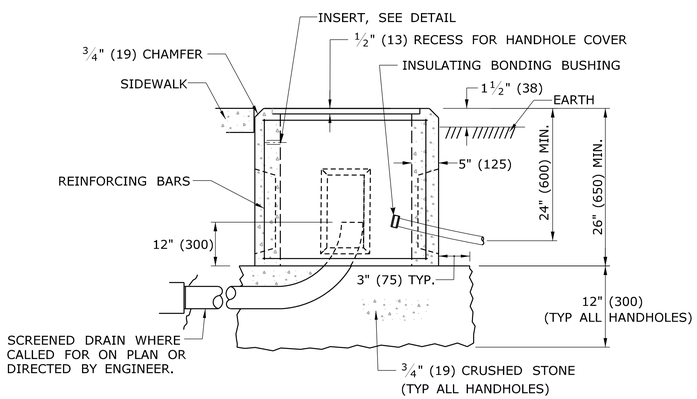

CONCRETE HANDHOLE TYPE I

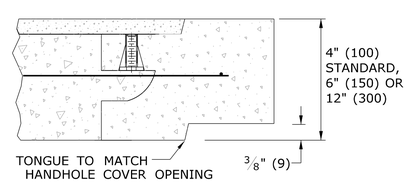

SECTION A-A
HANDHOLE EXTENSIONS

4 - #8 REINFORCING BARS REQ'D

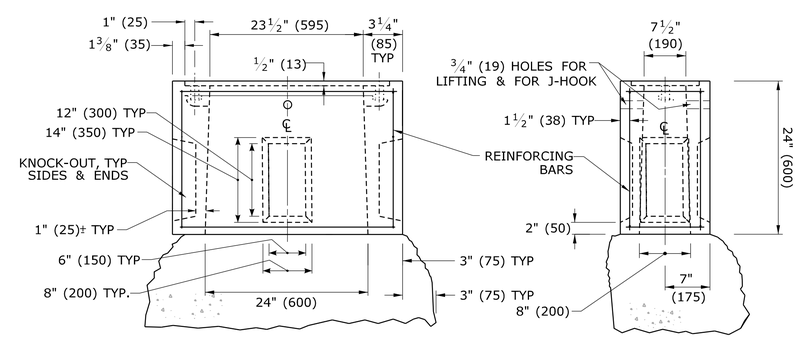

BASE SECTION
CONCRETE HANDHOLE TYPE II

HANDHOLE NOTES:

1. MINIMUM CLASS "C" CONCRETE.
2. COMPLETE TYPE II HANDHOLE:
   IN EARTH AREAS, CONSISTS OF A BASE SECTION WITH 4" (100) HANDHOLE EXTENSION,
   IN SIDEWALK AREAS, CONSISTS OF A BASE SECTION WITH 4" (100) CAST IRON COVER.
3. PLAN VIEW DIMENSIONS, SECTION VIEW, & DETAILS, SAME FOR BASE SECTION, EXTENSIONS & BANK ADAPTER.
4. GROUT AROUND ALL CONDUITS.
5. INSTALL 30" (750) SIDE PARALLEL TO ROAD UNLESS OTHERWISE NOTED.
6. CAST THE WORD "TRAFFIC" INTO TOP EDGE OF HANDHOLE, 1 1/2" (38) LETTERS.
7. WHERE AN EXISTING CONCRETE SIDEWALK SLAB ABUTTING A HANDHOLE IS DAMAGED OR CUT DURING INSTALLATION, REPLACE THE ENTIRE SIDEWALK SECTION.
8. 12-#3 REINFORCING BARS REQUIRED FOR ALL HANDHOLES. (8 HORIZONTAL, 4 VERTICAL)

LEGEND AS SHOWN ON TRAFFIC CONTROL SIGNAL PLAN:
- PROPOSED HANDHOLE
- EXISTING HANDHOLE

REV.	DATE	REVISION DESCRIPTION
1	4-2012	CAST IRON COVER: CHANGED BOLT TO PICK HOLE. ADDED EXTENSIONS, C-CHANNEL, CONDUCTOR CONNECTOR & MINOR REVISIONS.

THE INFORMATION, INCLUDING ESTIMATED QUANTITIES OF WORK, SHOWN ON THESE SHEETS IS BASED ON LIMITED INVESTIGATIONS BY THE STATE AND IS IN NO WAY WARRANTED TO INDICATE THE CONDITIONS OF ACTUAL QUANTITIES OF WORK WHICH WILL BE REQUIRED.

Plotted Date: 4/14/2012

DIMENSIONS ARE IN ENGLISH ('.") & METRIC UNITS (mm).
METRIC DIMENSIONS ARE ROUNDED:
- OVER 1" TO NEAREST 5 mm
- UNDER 1" TO NEAREST 1 mm.

NOT TO SCALE

STATE OF CONNECTICUT
DEPARTMENT OF TRANSPORTATION

Filename: CTDOT_TRAFFIC_STD.dgn Model: TR-1010_01

SUBMITTED BY: NAME/DATE/TIME: Tracy L. Fogarty 2012.05.01 12:55:16-04'00'
APPROVED BY: NAME/DATE/TIME: Timothy M. Wilson 2012.05.09 10:24:21-04'00'

CTDOT STANDARD SHEET
OFFICE OF ENGINEERING

STANDARD SHEET TITLE: CONCRETE HANDHOLE

STANDARD SHEET NO.: TR-1010_01