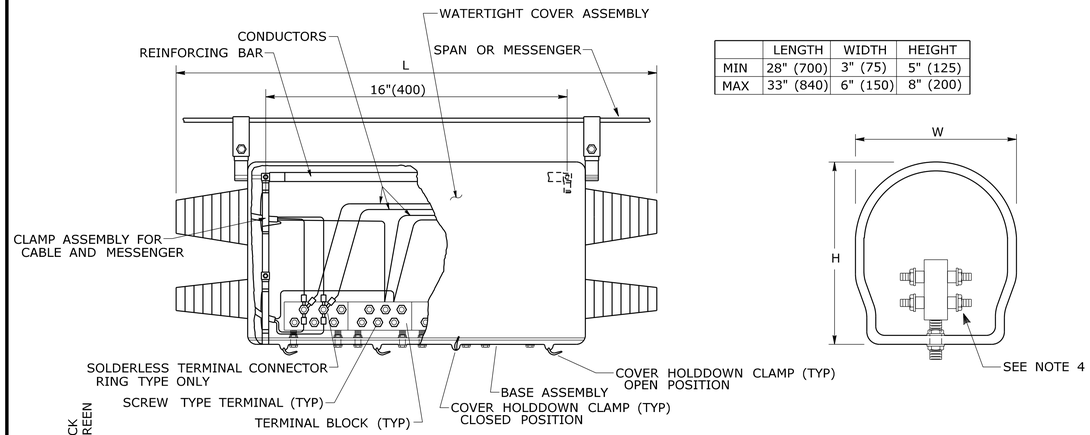

	LENGTH	WIDTH	HEIGHT
MIN	28" (700)	3" (75)	5" (125)
MAX	33" (840)	6" (150)	8" (200)

CABLE CLOSURE FOR TRAFFIC SIGNALS

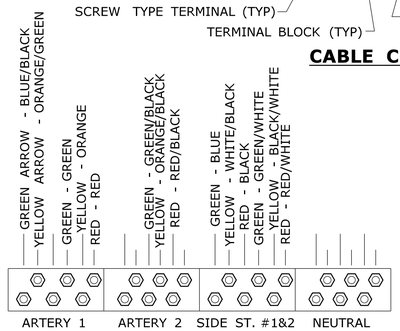

RECOMMENDED CONNECTION OF 21 CONDUCTOR CABLE IN CLOSURE

NOTES:

1. PROVIDE A MINIMUM OF FOUR TERMINAL BLOCKS WITH SEPARATE SCREW TYPE TERMINALS, SIX ON EACH SIDE.
2. INSTALL SEPARATE CABLE BETWEEN CLOSURE & EACH TRAFFIC SIGNAL ASSEMBLY. WIRE EACH TRAFFIC SIGNAL SECTION SEPARATELY BACK TO CABLE CLOSURE. JUMPERS BETWEEN TERMINALS ARE NOT ALLOWED EXCEPT ON NEUTRAL CONDUCTORS.
3. WIRE ALL SIGNALS, SAME DIRECTION FROM CONTROLLER, SEPARATELY WITH CONDUCTORS IN 21 OR 25 CONDUCTOR CABLE, EVEN IF INDICATIONS ARE IDENTICAL.
4. PREVENT CONNECTORS, TERMINAL POSTS AND CONDUCTORS FROM CONTACT WITH CLOSURE COVER AND SECURELY WRAP WITH ELECTRICAL TAPE OR RUBBER MASTIC TAPE.
5. CABLES THAT FEED PEDESTRIAN INDICATIONS, PUSH BUTTONS, AND DETECTORS BYPASS CABLE CLOSURE.

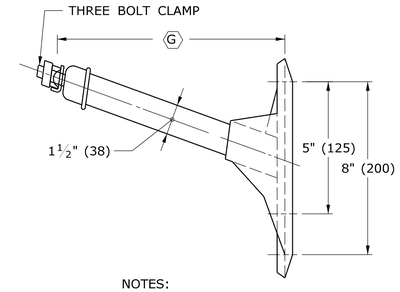

NOTES:

5/8" (16) THROUGH BOLT IN TOP HOLE.
1/2" (13) X 4" (100) LAG BOLT IN BOTTOM HOLE.
G LENGTH REQUIRED TO PROVIDE CLEARANCE IN ACCORDANCE WITH PURA CONSTRUCTION STANDARD SECTION 16.243.

COMMUNICATION CABLE EXTENSION BRACKET

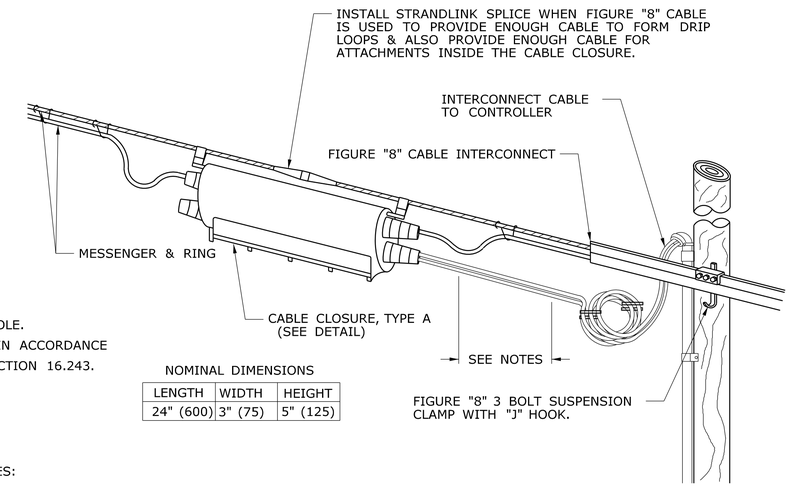

NOMINAL DIMENSIONS

LENGTH	WIDTH	HEIGHT
24" (600)	3" (75)	5" (125)

NOTES:

CABLE LENGTH IS SHOWN EXTENDED TO CLARIFY DRIP LOOP LEADING TO ENTRANCE FITTINGS.
WHEN CABLE IS TOO LARGE TO FORM DRIP LOOPS, INSTALL DIRECTLY INTO CLOSURE WITHOUT DRIP LOOPS.

OVERHEAD INTERCONNECT INSTALLATION

BONDING AND GROUNDING REQUIREMENTS FOR COMMUNICATION CABLES

1. PLACE BOND ON STRAND USING #6 AWG LEAVE COIL OF SUFFICIENT LENGTH TO REACH THE NEXT STRAND AT ALL OF THE FOLLOWING LOCATIONS:
   A. FIRST POLE
   B. LAST POLE
   C. JUNCTION POLE
   CONTACT THE UTILITY THAT OWNS THE NEXT STRAND TO COMPLETE THE BOND.
2. LEAVE COIL #6 AWG WIRE ATTACHED TO CABLE STRAND OF SUFFICIENT LENGTH TO REACH VERTICAL GROUNDING CONDUCTOR AT LEAST EVERY 10 POLES. NOTIFY ELECTRIC COMPANY TO MAKE ATTACHMENT TO GROUNDING CONDUCTOR.

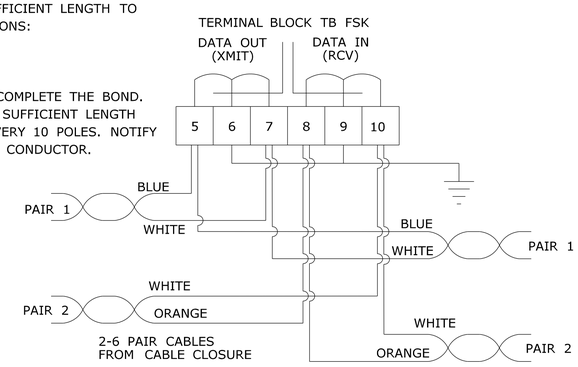

NOTES:

CONNECT SHIELDS TO GROUND ONLY AT EVERY OTHER CABINET, LEAVE SHIELD OPEN AT ALTERNATE CABINETS.
TAG 6 PAIR CABLES WITH INTERSECTION DESTINATION.
SPARE PAIRS TO BE FOLDED BACK AND NEATLY TIED ADJACENT TO TERMINAL BLOCK.

TYPICAL COMMUNICATION CABLE CONNECTION IN CONTROLLER CABINET

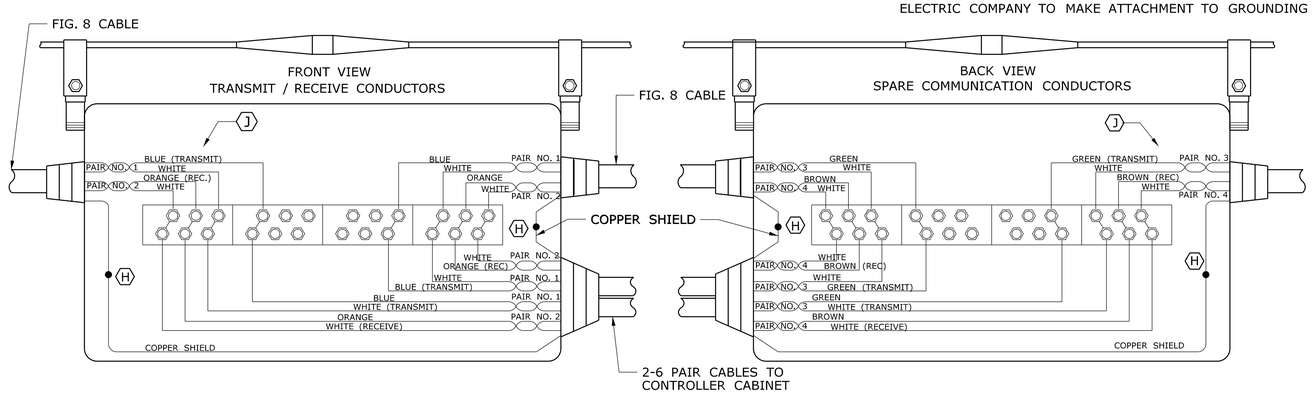

FIG. 8 CABLE			
PAIR #	DOT SPARE	PAIR #	MUNICIPAL SPARES
3	GREEN - WHITE	5	SLATE - WHITE
4	BROWN - WHITE	6	BLUE - RED

6 PAIR, CABLE	
PAIR #	DOT SPARE
5	SLATE - WHITE
6	BLUE - RED

NOTES:

SPARE PAIRS TO BE FOLDED BACK AND NEATLY TIED. GROUP MUNICIPAL SPARES TOGETHER, SEPARATE FROM THOSE RESERVED FOR D.O.T. MUNICIPAL SPARES ARE NOT TO BE CUT.
DO NOT BOND THE CABLE SHEATH TO THE SUPPORT STRAND.
H CONNECT ONLY TO SHIELD OF CORRESPONDING 6 PAIR CABLE.
J WHEN CONNECTING TO AN EXISTING SYSTEM, VERIFY COLOR CODE OF TRANSMIT AND RECEIVE CONDUCTORS.

TYPICAL COMMUNICATION CABLE CONNECTION IN CABLE CLOSURE, TYPE A

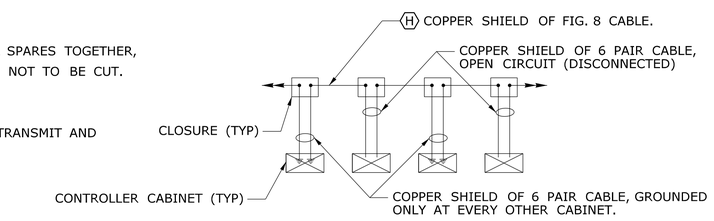

LEGEND AS SHOWN ON TRAFFIC CONTROL SIGNAL PLAN:
- PROPOSED UTILITY POLE
- EXISTING UTILITY POLE
- POLE ANCHOR & GUY
- CABLE CLOSURE

REV.	DATE	REVISION DESCRIPTION
1	4-2012	MINOR REVISIONS.

THE INFORMATION, INCLUDING ESTIMATED QUANTITIES OF WORK, SHOWN ON THESE SHEETS IS BASED ON LIMITED INVESTIGATIONS BY THE STATE AND IS IN NO WAY WARRANTED TO INDICATE THE CONDITIONS OF ACTUAL QUANTITIES OF WORK WHICH WILL BE REQUIRED.

Plotted Date: 4/25/2012

DIMENSIONS ARE IN ENGLISH ('.') & METRIC UNITS (mm). METRIC DIMENSIONS ARE ROUNDED:
- OVER 1" TO NEAREST 5 mm
- UNDER 1" TO NEAREST 1 mm.

NOT TO SCALE

STATE OF CONNECTICUT
DEPARTMENT OF TRANSPORTATION

Filename: CTDOT_TRAFFIC_STD.dgn Model: TR-1113_01

SUBMITTED BY: NAME/DATE/TIME: Tracy L. Fogarty 2012.05.01 12:57:09-04'00'
APPROVED BY: NAME/DATE/TIME: Timothy M. Wilson 2012.05.09 10:27:17-04'00'

CTDOT STANDARD SHEET
OFFICE OF ENGINEERING

STANDARD SHEET TITLE: CONTROL CABLE

STANDARD SHEET NO.: TR-1113_01